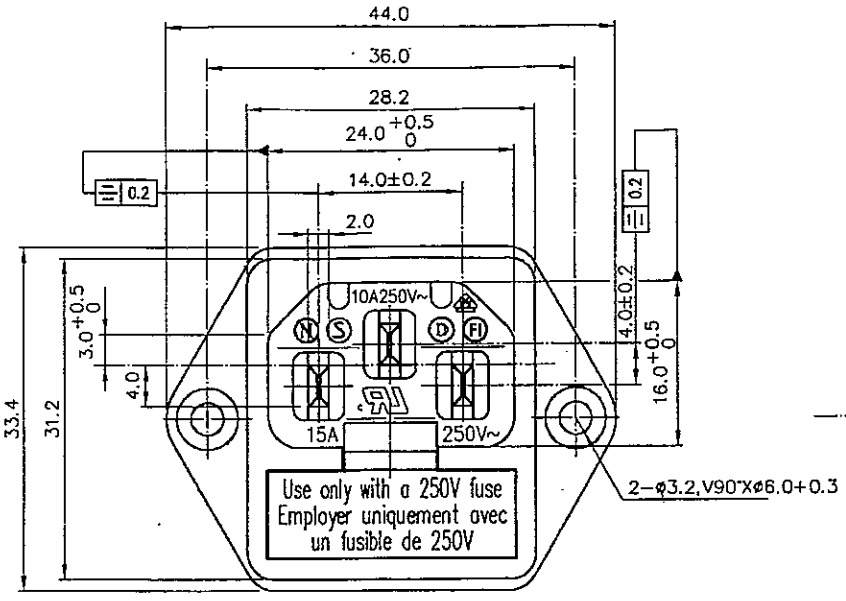

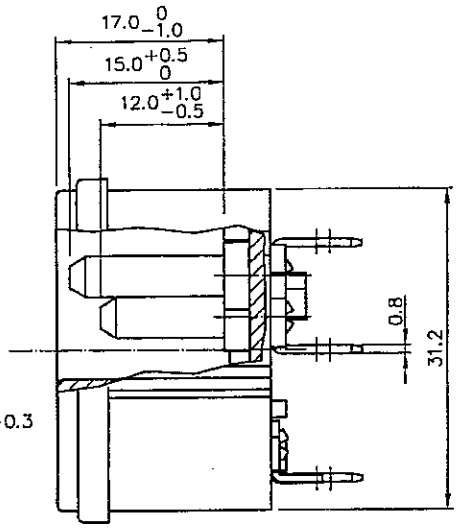

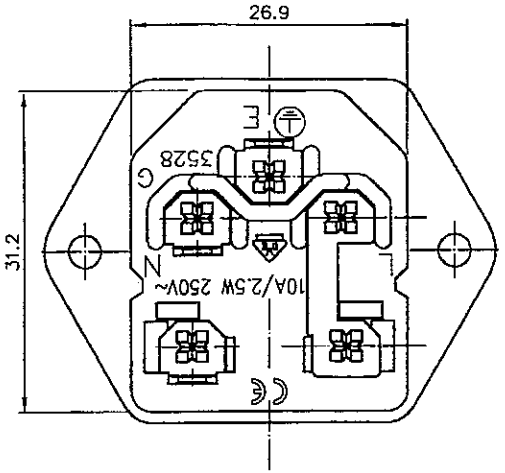

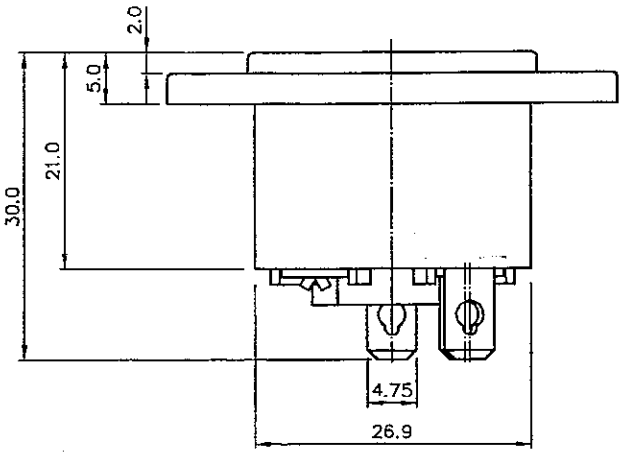

1.RATING :15A 250VAC (UL,CSA)
INLET :10A 250V~ (VDE)
FUSE HOLDER : ⊟ max. 10A/2.5W 250V~ (VDE)
2.DIELECTRIC STRENGTH :MUST WITHSTAND 2000V RMS
50 OR 60Hz FOR 1 MINUTE
BETWEEN EACH TERMINAL.

UL NO:E122313(S)
C-UL NO:E122313(S)
FIMKO NO:185440-01
DEMKO NO:304865
NEMKO NO:P95104072
SEMKO NO:9545237 01
VDE NO:40011983

CE

P/N: 085071 (20HS038)
Description: 3P AC Power Inlet Screw Mount Type

SAMAR ENTERPRISES CO., LTD.